WPB-21046

BREAK ALL SHARP EDGES

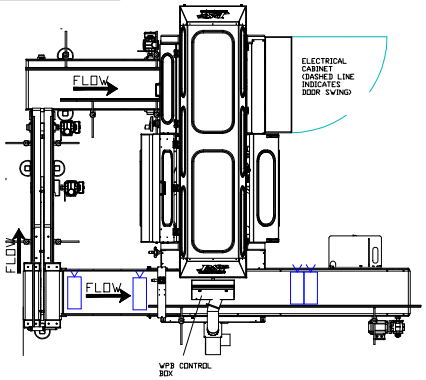

- TAILS OUT WHEN PAIRED W/ LH BAGGER
- TAILS TO BOTTOM OF BAG WHEN PAIRED WITH RH BAGGER

STANDARD MULTI-PAK BAGGER W/ RBT

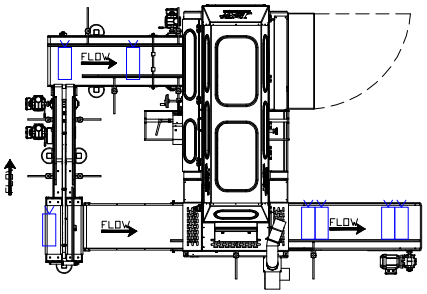

- TAILS OUT WHEN PAIRED W/ LH BAGGER
- TAILS TO BOTTOM OF BAG WHEN PAIRED WITH RH BAGGER

NARROW MULTI-PAK BAGGER W/ MANUAL BAG TABLE

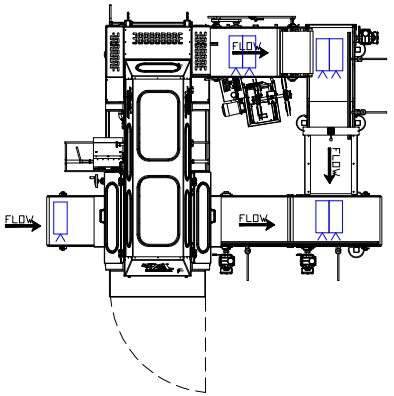

- TAILS TO BOTTOM OF BAG WHEN PAIRED W/ LH BAGGER
- TAILS OUT WHEN PAIRED W/ RH BAGGER

NARROW REVERSE FEED MULTI-PAK W/ MANUAL BAG TABLE

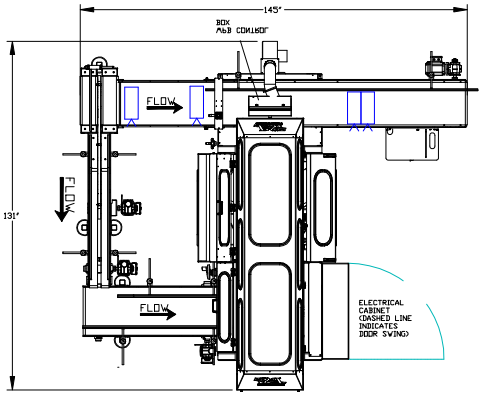

- TAILS OUT WHEN PAIRED W/ RH BAGGER
- TAILS TO BOTTOM OF BAG WHEN PAIRED WITH LH BAGGER

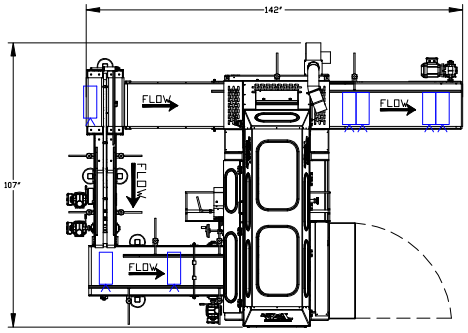

- TAILS OUT WHEN PAIRED W/ RH BAGGER
- TAILS TO BOTTOM OF BAG WHEN PAIRED WITH LH BAGGER

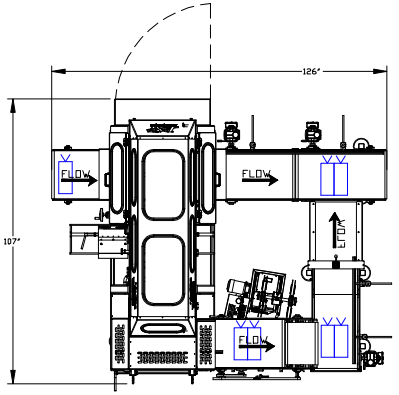

- TAILS OUT WHEN PAIRED WHEN PAIRED W/ LH BAGGER
- TAILS TO THE BOTTOM OF THE BAG WHEN PAIRED W/ RH BAGGER

BETTENDORF STANFORD INC.	MATERIAL		PROPRIETARY AND CONFIDENTIAL THE INFORMATION CONTAINED IN THIS DRAWING IS THE SOLE PROPERTY OF BETTENDORF STANFORD INC. ANY REPRODUCTION IN PART OR AS A WHOLE WITHOUT THE WRITTEN PERMISSION OF BETTENDORF STANFORD INC. IS PROHIBITED.	DO NOT SCALE DRAWING UNLESS OTHERWISE SPECIFIED DIMENSIONS ARE IN INCHES TOLERANCES: FRACTIONAL ±1/64 ANGULAR: ±1/2° DECIMAL: ±.01 ±.005	TITLE: BSI WPB LAYOUT - OPTION SHEET
	MAT. SIZE			DRAWN MAB	SIZE D DWG. NO. WPB-21041 REV
	MAT. LGTH			DATE 6/24/2021	REVIEWED BY SHEET 2 OF 2
	FINISH				

WPB-21046 REV D